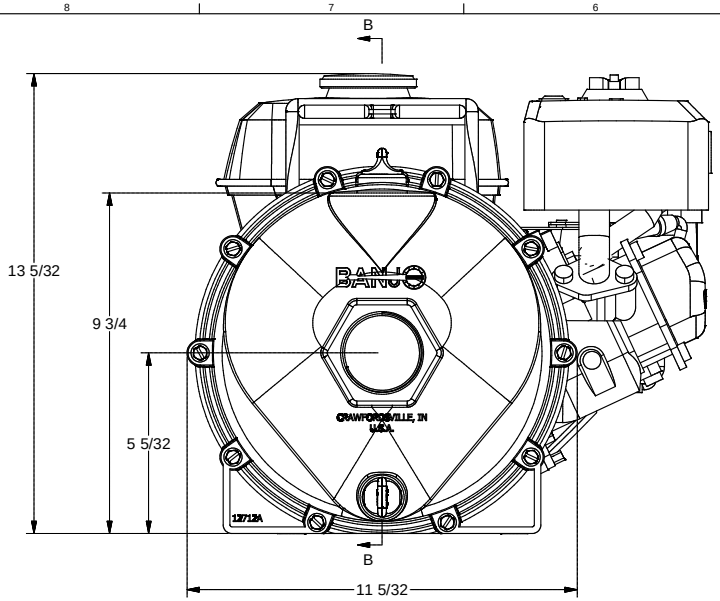

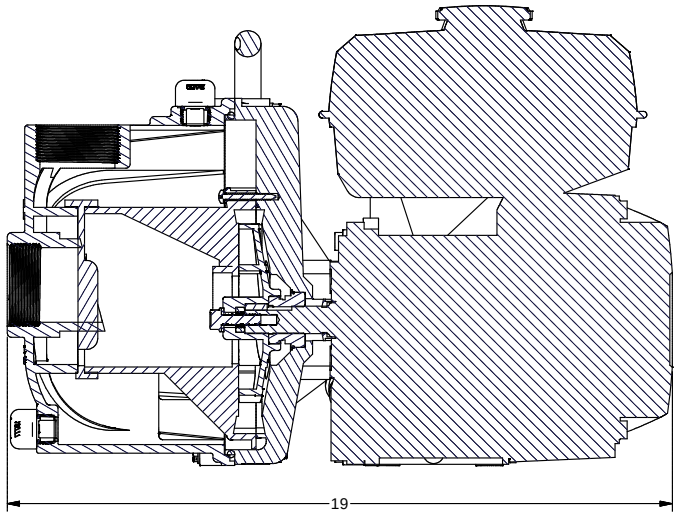

Parts List			
ITEM	QTY	PART NUMBER	DESCRIPTION
1	4	12901	5/16" FLAT WASHER
2	4	12717BN	#11 O'RING
3	1	12712ABN	2" PUMP BODY ASSY
4	1	12705BN	CHECKVALVE
5	1	12900	#10 X 1 1/2" PPH SMS
6	2	12725	#6 X 1/2" PPH SMS
7	1	12719ABN	#375 O'RING
8	1	12754BN	O'RING SEGMENT
9	10	12720	1/4-20 X 2 1/2" SL IND HWHS
10	10	V07018	1/4" LOCKWASHER
11	10	V07019	1/4-20 HEX NUT
12	1	12775A	7/16-14 HEX NUT
13	1	12902A	3/16" SQ. X 5/8" KEY
14	1	12702A	2" POLY PUMP VOLUTE
15	1	12772	IMPELLER
16	1	12765A	5/16-24 X 1 1/8" HFS
17	1	12774VA	IMPELLER BOLT GASKET
18	4	12715A	5/16-24 X 1 3/4" HHCS
19	1	12710BN	#029 O'RING
20	1	12910	DECAL (N/S)
21	1	12703A	POLY PUMP REAR BRACKET
22	1	12716	PUMP SLINGER
23	1	12733BN	MECH SEAL ASSY - BUNA
24	1	E5H	5 HP HONDA

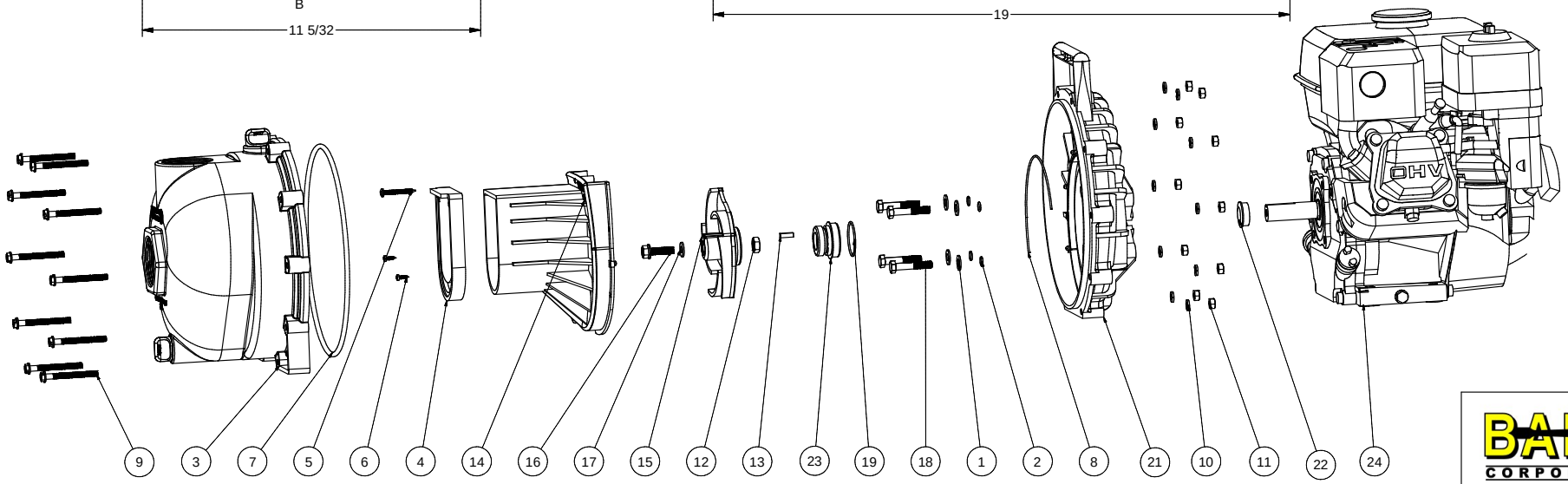

THIS DRAWING AND ALL INFORMATION CONTAINED THEREON ARE THE EXCLUSIVE PROPERTY OF BANJO CORPORATION.

UNLESS SPECIFACALLY NOTED, THIS DRAWING AND ITEMS SHOWN ON THIS DRAWING ARE SUBJECT TO CHANGE AT ANY TIME.

BANJO CORPORATION
150 BANJO DRIVE, CRAWFORDSVILLE, IN 47933
WEB SITE: WWW.BANJOCORP.COM
E-MAIL: SALES1@BANJOCORP.COM

DESCRIPTION
2" POLY PUMP W/ 5.5 HP HONDA, BUNA

PART NUMBER
200PH-5BN